SIMULATION OF RETURN RATIO IN FULLY DIFFERENTIAL FEEDBACK CIRCUITS *

Paul J. Hurst and Stephen H. Lewis

Solid-State Circuits Research Laboratory
Dept. of Electrical and Computer Engineering
University of California, Davis, CA 95616

ABSTRACT

This paper describes SPICE [1] simulation techniques that can be used to find the gain and phase margins of perfectly balanced, fully differential circuits. The basis of the techniques is the calculation of the return ratios of the differential- and common-mode feedback loops. The closed-loop d.c. operating point is preserved during the return-ratio simulations so that SPICE properly computes the linear small-signal models associated with all nonlinear devices.

1. INTRODUCTION

Fully differential structures are often used in integrated circuits because they offer many advantages over their single-ended counterparts. Some of the advantages are improved immunity to power-supply noise, greater output voltage swing, and cancellation of even-order distortion. These benefits come at the expense of increased complexity.

Fig. 1(a) shows the schematic of a fully differential feedback amplifier. It has two feedback paths: one from the positive op-amp output to the inverting op-amp input, and the other from the negative op-amp output to the noninverting op-amp input. Therefore, the circuit is an example of a multiple-loop feedback network. Determination of stability of multiple-loop circuits through frequency-domain analysis is difficult in general [2,3,4]. However, if the structure is perfectly balanced, the analysis is simplified by using common-mode (CM) and differential-mode (DM) half-circuit concepts [5,6]. Half-circuit analysis is based on the fact that when a purely DM (or CM) input is applied to a balanced circuit, a purely DM (or CM) output appears. These outputs can be predicted by identifying two half circuits that do not interact and therefore can be analyzed independently. If the DM and CM half circuits can be modeled as single-loop feedback circuits [2,3], the frequency-domain stability analysis is greatly simplified.

The loop transmission in a single-loop feedback circuit can be characterized by the return ratio associated with a controlled source [2,3,7]. The return ratio is important because it can be used to check stability of the feedback circuit. In this paper, the return-ratio simulation technique in [8] that applies to single-ended circuits is extended to the perfectly balanced differential case to allow simulation of the DM and CM loops.

2. ASSUMPTIONS & TERMINOLOGY

Unless stated otherwise, the following assumptions hold throughout this paper.

* This work was supported in part by NSF grant MIP-9210071 and by the UC MICRO Program.

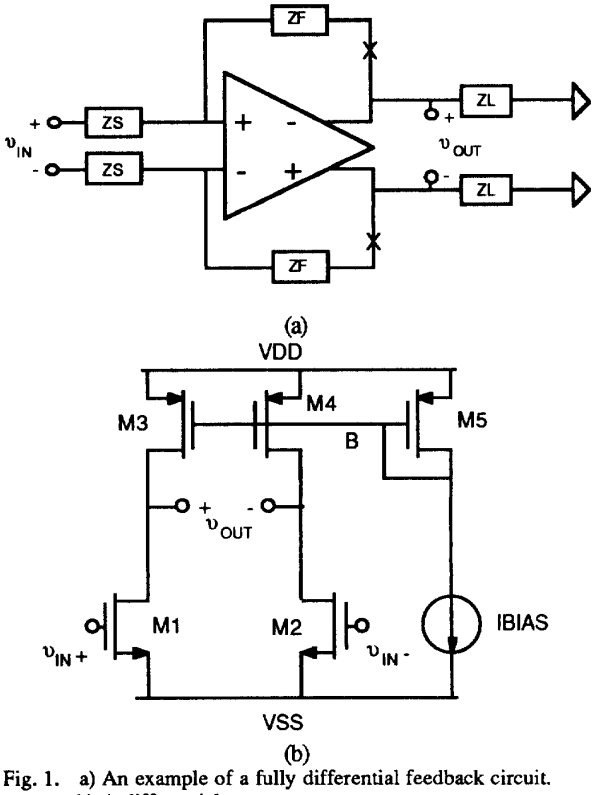

Fig. 1. a) An example of a fully differential feedback circuit.
b) A differential op amp.

1) The differential circuit is perfectly symmetric [6,9].
2) The feedback network has a unique d.c. operating point.
3) Every circuit under study can be reduced to a single-loop feedback circuit or to a multiple-loop circuit with a break point as described in Section 6.
4) The linear feedback network under analysis is composed of controlled sources and passive elements.
5) The term "stability" here refers to small-signal stability at a given d.c. operating point.

The IEEE standards for voltages and currents are observed in this paper; i.e. i_t is an a.c. current, I_T is a d.c. current, and i_T is a total (a.c. + d.c.) current. Further, a 'd' or 'c' in a subscript refers to a DM or CM signal, respectively. For example, i_{tc} denotes an a.c. common-mode test current.

3. SPICE SIMULATION OF RETURN RATIO - BACKGROUND

The key characteristic of a single-loop feedback circuit is that it contains a unique signal path that traverses the

0-7803-1886-2/94 $3.00 © 1994 IEEE

feedback loop from a dependent source in an active device to its controlling signal [2,3]. The loop transmission of a single-loop transistor feedback circuit can be evaluated by computing the return ratio (RR) for a dependent source in an active device [2,3,7].

A technique for finding the return ratio by breaking the single-loop feedback circuit at an arbitrary point and using a combination of generalized current and voltage return ratios to measure the total return ratio was presented in [10] as an extension of method four in [11]. The current return ratio, RR_I, (voltage return ratio, RR_V) is found by setting all independent sources in the linearized small-signal circuit to zero, breaking the feedback loop, injecting a test current i_t (test voltage v_t), and measuring the return current i_r (return voltage v_r) flowing into a short circuit (appearing across an open circuit) at the other side of the break point. Then $RR_I = -i_r/i_t$ ($RR_V = -v_r/v_t$), and the total return ratio is given by

$$RR = \left[\frac{1}{RR_I} + \frac{1}{RR_V}\right]^{-1}. \quad (1)$$

The closed-loop d.c. operating point can be preserved during simulation of RR_I and RR_V by using d.c. sources to replicate the bias [8]. Maintaining the d.c. operating point is important so that all nonlinear elements in the feedback circuit, such as the transistors and junction capacitances, are properly biased, assuring that the circuit simulator computes the correct small-signal models for the linear analysis. In the next two sections, the technique for SPICE simulation of RR is extended to handle the DM and CM feedback in fully differential feedback circuits.

4. RETURN-RATIO SIMULATION FOR THE DM FEEDBACK LOOP

Fig. 1(b) shows an example of an op amp that could be used in Fig. 1(a). The sources of M1-2 are connected directly to VSS here instead of through a tail current source for simplicity. Fig. 2 shows a DM a.c. half-circuit for the feedback amplifier of Fig. 1. This half-circuit is a single-loop feedback network because the only feedback path is from the drain to the gate of M1 through ZF in parallel with C_{gd}(M1). For simplicity, C_{gd}(M1)=0 will be assumed. (Non-zero C_{gd}(M1) can be included as part of ZF or treated as a separate local feedback loop as described in Section 6.) Therefore, the return ratio for the DM half circuit, $RR(DM)$,

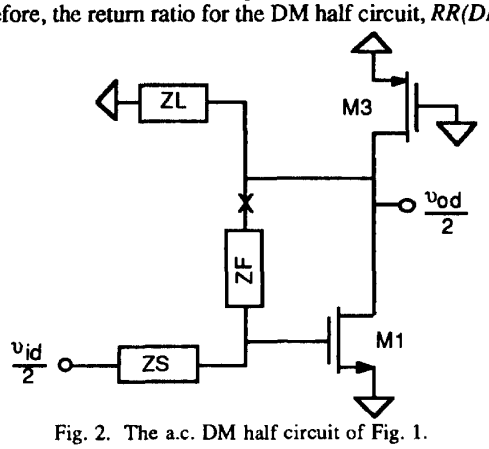

Fig. 2. The a.c. DM half circuit of Fig. 1.

can be found by replacing the transistor in Fig. 2 with a linear small-signal model, setting $v_{id} = 0$, breaking the DM feedback loop at the 'X', calculating $RR_I(DM)$ and $RR_V(DM)$, and plugging these values into (1).

The SPICE simulations of $RR_I(DM)$ and $RR_V(DM)$ should maintain the closed-loop d.c. operating point so that SPICE computes the small-signal models at the operating point. With this approach, $RR(DM)$ can be measured by direct simulation of the original balanced circuit because a balanced circuit produces DM signals that are identical to those produced by the DM half circuit when driven by the same purely DM signals. For example, if the circuit in Fig. 1(a) is broken at the two 'X's, and if the breaks are driven by purely differential signals, only the DM loop is excited, and as a result, $RR_V(DM)$ or $RR_I(DM)$ can be measured.

Fig. 3 shows circuits used to simulate $RR_V(DM)$ and $RR_I(DM)$ for Fig. 1. Fig. 3(a) shows the d.c. reference circuit. It contains no a.c. signals and is a replica of the circuits used to find $RR_V(DM)$ (Fig. 3(b)) and $RR_I(DM)$ (Fig. 3(c)). For the $RR_V(DM)$ simulation in Fig. 3(b), the upper half of the DM circuit is broken at the top 'X' shown in Fig. 1(a), and the break is driven by the a.c. test source $v_{td}/2$. Similarly, the lower half of the DM circuit is broken at the bottom 'X' in Fig. 1(a) and driven by $-v_{td}/2$. Therefore, the voltage across the break is a purely differential voltage v_{td}. Measuring the differential return voltage $v_{rd} = v_{rt} - v_{rb}$ in Fig. 3(b) allows calculation of $RR_V(DM)$ as $RR_V(DM) = -v_{rd}/v_{td}$.

Dependent sources controlled by d.c. voltages and currents in Fig. 3(a) are used in Fig. 3(b) to maintain the closed-loop d.c. bias when the feedback loop is broken [8]. In Fig. 3(b), voltage-controlled voltage sources are placed in series with a.c. sources $v_{td}/2$ and $-v_{td}/2$ to replicate the d.c. bias voltage at the driving nodes. On the other side of the breaks, current-controlled current sources replicate the d.c. currents that flow toward the op-amp outputs from the feedback branches in Fig. 3(a). Current sources are chosen for biasing here to allow the return voltage to be measured across an a.c. open circuit.

Similarly, $RR_I(DM)$ can be simulated at the closed-loop d.c. operating point using the circuit in Fig. 3(c). With a purely differential current, i_{td}, applied at the breaks as shown, the differential return current $i_{rd} = i_{rt} - i_{rb}$ and the $RR_I(DM) = -i_{rd}/i_{td}$ can be found. Dependent sources that are controlled by d.c. quantities in Fig. 3(a) are again used to maintain the closed-loop operating point. Current-controlled current sources are placed in parallel with a.c. sources $i_{td}/2$ and $-i_{td}/2$ to replicate the d.c. currents at the driving nodes. On the other side of the breaks, voltage-controlled voltage sources replicate the d.c. voltage at the op-amp outputs so that the return current is measured into an a.c. short circuit.

In some cases, breaking the feedback loop produces a node that has no d.c. path to ground because capacitors block all such paths from the break point. For example, if ZF in Fig. 3(a) is a capacitance and the feedback is broken at the 'X's, the driving nodes, TD and BD, in Fig. 3(c) connect only to capacitors and do not have d.c. paths to ground, which

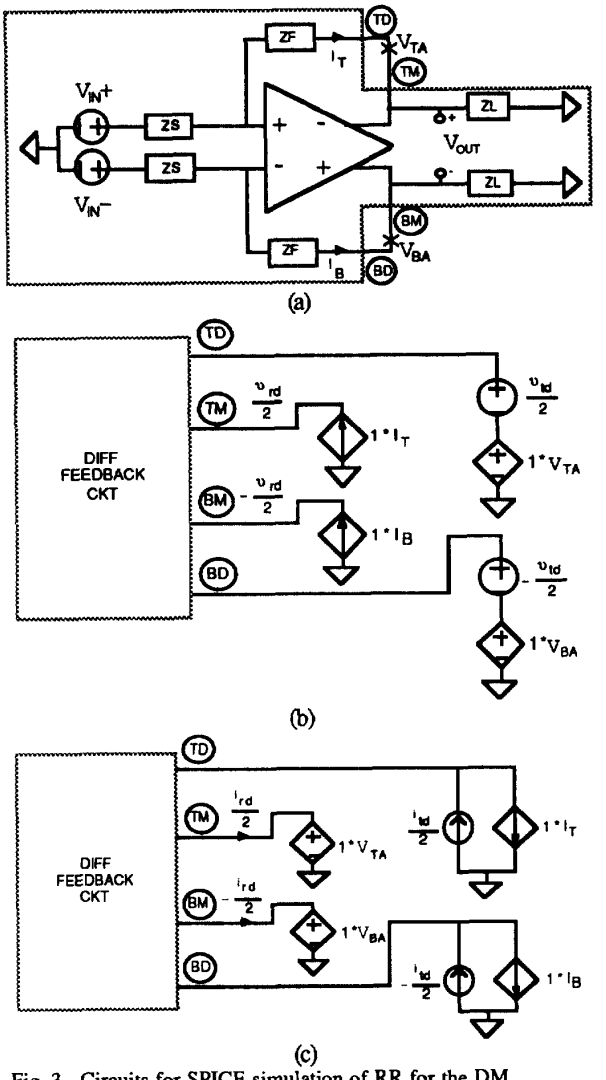

Fig. 3. Circuits for SPICE simulation of RR for the DM feedback loop in Fig. 1. a) The d.c. reference circuit. b) Circuit for measurement of $RR_V(DM)$. c) Circuit for measurement of $RR_I(DM)$.

is not allowed in SPICE. To overcome this problem, d.c. paths to ground can be introduced by adding negligibly large resistances from the breaks to ground. To make sure that the effect of the added resistances is properly incorporated into the d.c. bias point, these resistances should be added to all three simulation circuits (Figures 3(a)-(c)). One convenient way to do this is to enter the feedback network as a subcircuit that is used repeatedly for all simulations.

Simulating all three circuits in Fig. 3 at once is not necessary and may lead to convergence problems because the circuits are linked through dependent sources. If each of the three circuits is simulated separately in SPICE, the dependent d.c. sources in Figures 3(b) and (c) should be replaced by independent d.c. sources, and the d.c. simulation (Fig. 3(a)) should be run first to find the values of these d.c. sources.

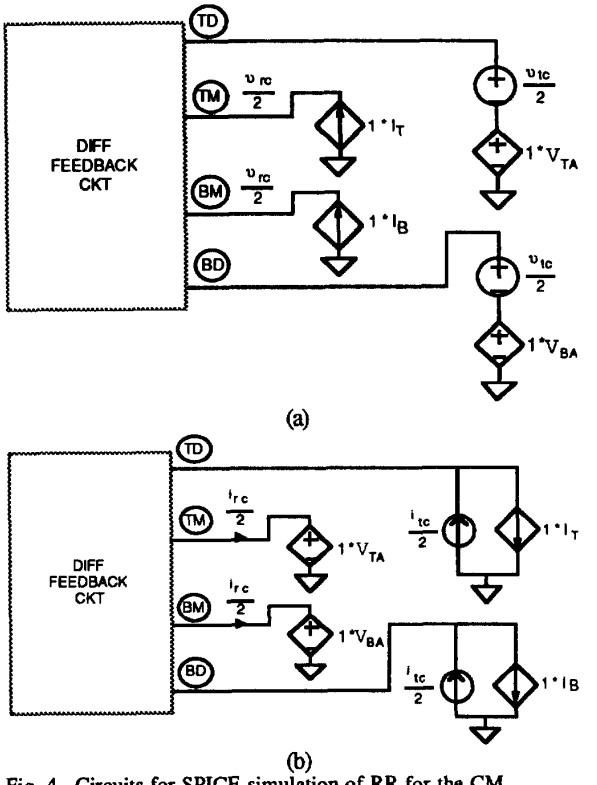

Fig. 4. Circuits for SPICE simulation of RR for the CM feedback loop in Fig. 1. a) Circuit for measurement of $RR_V(CM)$. b) Circuit for measurement of $RR_I(CM)$. The d.c. reference circuit is Fig. 3(a).

5. RETURN-RATIO SIMULATION FOR THE CM FEEDBACK LOOP

As in the DM case, SPICE simulation of $RR_I(CM)$ and $RR_V(CM)$ can be carried out directly on the original circuit. Again assuming that C_{gd}(M1)=0, the CM feedback loop in Fig. 1 can be broken at the points marked by the 'X's. Figures 4(a) and (b) show circuits that apply purely CM a.c. test signals at the breaks and can be used to find $RR_V(CM) = -v_{rc}/v_{tc}$ and $RR_I(CM) = -i_{rc}/i_{tc}$, respectively. The closed-loop d.c. biasing here is replicated by dependent sources that are controlled by the d.c. reference circuit in Fig. 3(a). As in Section 4, these dependent d.c. sources can be replaced by independent d.c. sources to simplify convergence if the circuit in Fig. 3(a) is simulated first.

Fig. 5 shows the CM a.c. half-circuit for the amplifier in Fig. 1. Because a tail current source is not used in Fig. 1, Z_1=0 here. Also, the impedance Z_B is the output impedance of the bias circuitry connected to node B. As in Fig. 2, the half circuit here is a single-loop feedback circuit. Because the simulations in Figures 4(a) and (b) are carried out on two independent copies of this half circuit, the circuits under simulation in Fig. 4 are also single-loop feedback circuits.

6. MULTIPLE FEEDBACK LOOPS

In single-loop feedback circuits, stability can be checked

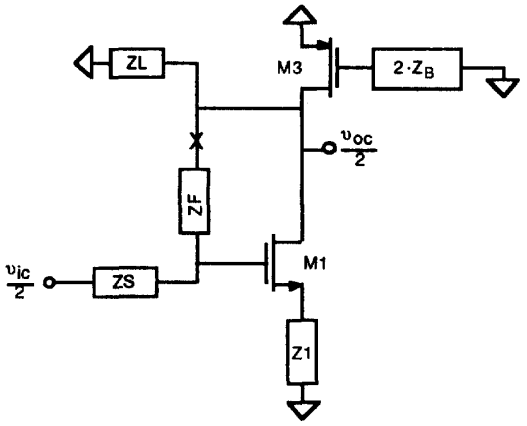

Fig. 5. The a.c. CM half circuit.

by finding the gain and/or phase margins of a single return ratio. When multiple feedback loops are present, however, multiple return ratios must be examined under various conditions to check stability in general [2,3,4]. In some special cases, however, stability of a multiple-loop circuit can be determined from a single return ratio. This section briefly describes these special cases.

Most op amps are more complicated than the one shown in Fig. 1(b). For example, a common topology includes a tail current source to bias the input differential pair [6]. If such an op amp is used in the feedback configuration shown in Fig. 1(a), the DM half circuit is the single-loop feedback circuit shown in Fig. 2 because the sources of M1-2 operate at a.c. ground for differential inputs. Also the CM half circuit is still shown in Fig. 5, but $Z_1 \neq 0$ here because it represents twice the output impedance of the tail current source. Non-zero Z_1 causes local feedback through M1. Since the circuit also has global feedback through *ZF*, this CM half circuit has multiple feedback loops. If the local feedback circuit can be modeled as a combination of a stable controlled source and input and output impedances that consist of only passive elements, the multiple-loop circuit reduces to a single-loop circuit. Then the stability can be checked by finding the RR for the controlled source in the model of the local feedback loop using the break points shown in Fig. 3(a).

If the DM half circuit is a single-loop feedback circuit, and if the structure is balanced, the presence of multiple CM feedback loops does not affect the simulation of *RR(DM)*. Such situations occur often in op amps that employ additional circuitry to control the CM output voltage.

The other special case of multiple-loop feedback applies to circuits that consist of a number of independent single-loop networks and contain a single break point that simultaneously breaks all feedback loops. Under these assumptions, stability can be checked by finding the RR at the single break point [12]. Fig. 6 shows an example of such a circuit. It contains two feedback loops, which can both be broken at the 'X'.

7. CONCLUSION

This paper has described SPICE simulation techniques that extend frequency-domain, RR simulations to balanced, fully differential structures with single-loop half circuits. Under certain conditions given in the paper, these techniques also apply to multiple-loop circuits. The main advantage of these techniques is that they can be used to measure the gain and/or phase margins of such circuits with feedback. This information can be used to determine whether the circuits are stable in a small-signal sense. To determine whether the circuits are stable for large signals, the step response for a large input should also be observed in the time domain.

REFERENCES

[1] L.W. Nagel and D.O. Pederson, *SPICE - Simulation Program with Integrated Circuit Emphasis*, April 1973, Memo No. ERL-M382, Electronics Research Laboratory, University of California, Berkeley.

[2] H.W. Bode, *Network Analysis and Feedback Amplifier Design*, Van Nostrand, New York, 1945.

[3] E.S. Kuh and R.A. Rohrer, *Theory of Linear Active Networks*, Holden-Day, San Francisco, 1967.

[4] J.G. Truxal, *Control System Synthesis*, McGraw-Hill Book Co., New York, 1955.

[5] E.J. Angelo, *Electronic Circuits*, McGraw-Hill Book Co., New York, 1958, pp. 283-287.

[6] P.R. Gray and R.G. Meyer, *Analysis and Design of Analog Integrated Circuits*, Wiley, New York, 3rd edition, 1993.

[7] S. Rosenstark, *Feedback Amplifier Principles*, MacMillan, New York, 1986.

[8] P.J. Hurst, "Exact Simulation of Feedback Circuit Parameters," *Trans. on Circuits and Systems*, pp. 1382-1389, Nov. 1991.

[9] R.D. Middlebrook, *Differential Amplifiers*, John Wiley and Sons, New York, 1963.

[10] S. Rosenstark, "Loop Gain Measurement in Feedback Amplifiers," *Int. J. Electronics*, Vol. 57, No. 3, pp. 415-421, 1984.

[11] R.D. Middlebrook, "Measurement of Loop Gain in Feedback Systems," *Int. J. Electronics*, Vol. 38, No. 4, pp. 485-512, 1975.

[12] R.G. Meyer, R. Eschenback, and R. Chin, "A Wide-band Ultralinear Amplifier from 3 to 300 MHz," *Journal of Solid-State Circuits*, pp. 167-175, Aug. 1974.

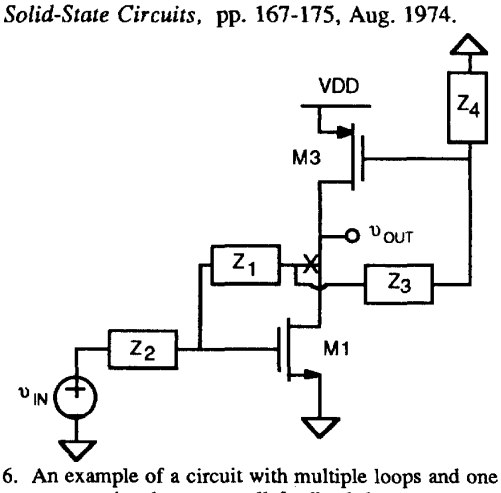

Fig. 6. An example of a circuit with multiple loops and one break point that opens all feedback loops.